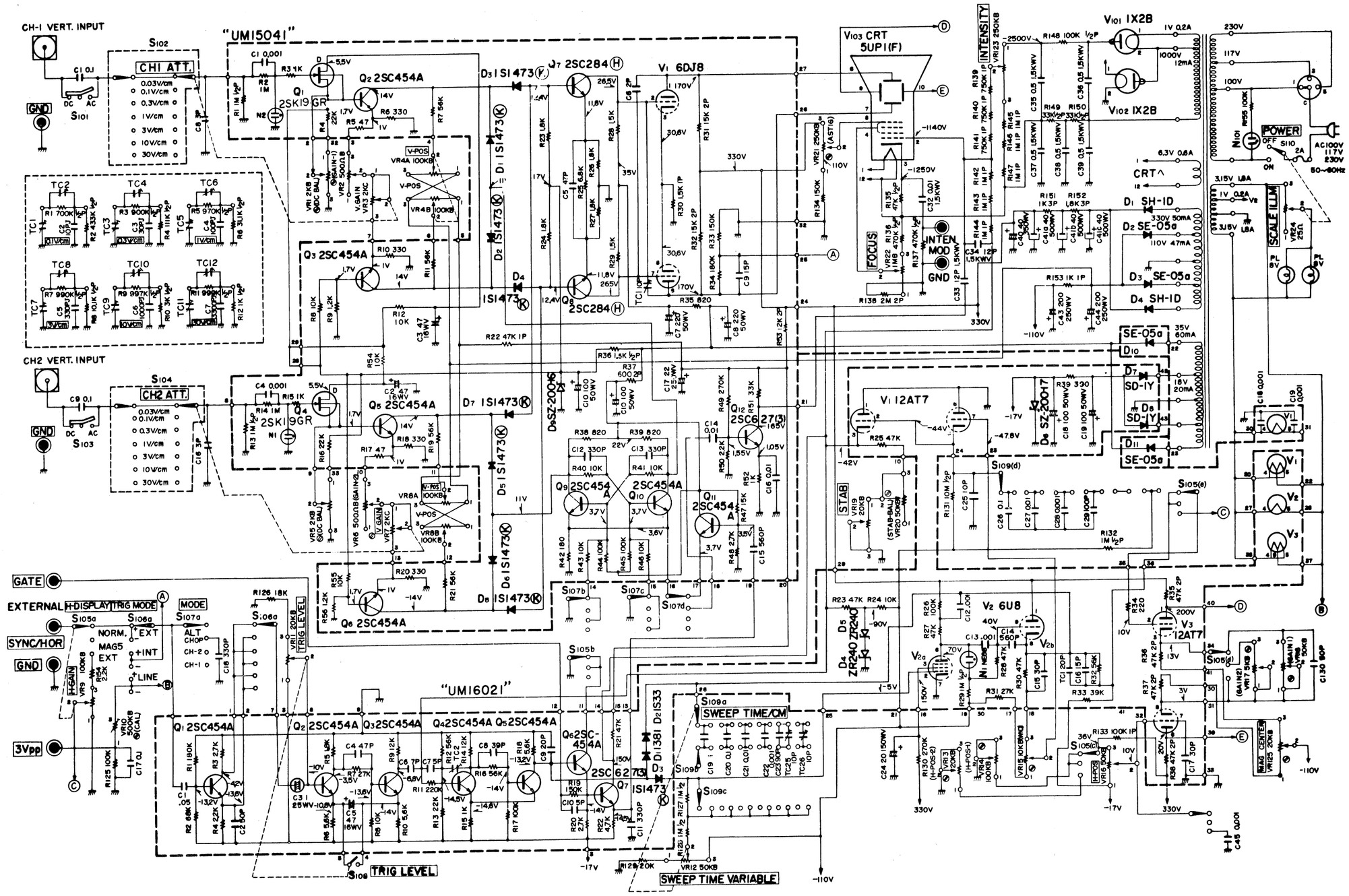
CH-1 VERT. INPUT
CH2 VERT. INPUT
CH1 ATT.
CH2 ATT.
"UM15041"
"UM16021"
V103 CRT 5UP1(F)
INTENSITY
FOCUS
INTEN MOD
GND
POWER
CRT
SCALE ILLM
STAB
GATE
EXTERNAL
SYNC/HOR
3Vpp
MODE
TRIG MODE
TRIG LEVEL
SWEEP TIME/CM
SWEEP TIME VARIABLE
MAG CENTER